KABEER ENTERPRISES

CHAPTER OF AUTOMATION SOLUTION

INDUSTRIAL AUTOMATION 4.0

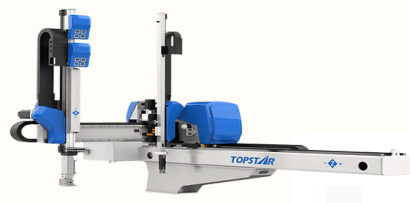

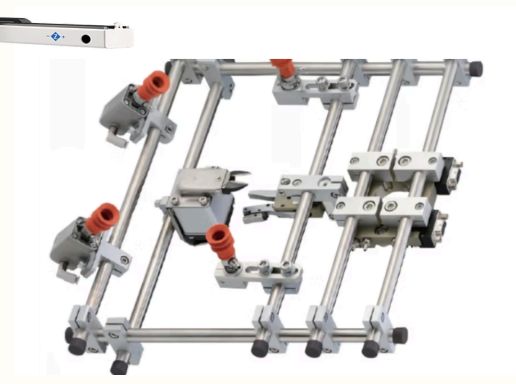

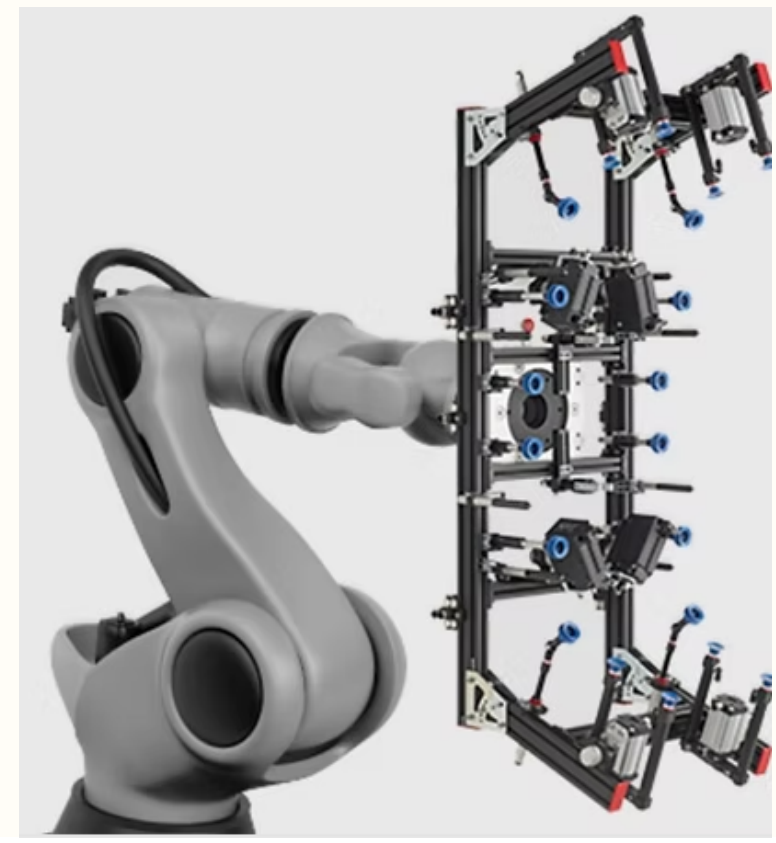

INDUSTRIAL AUTOMATION 4.0

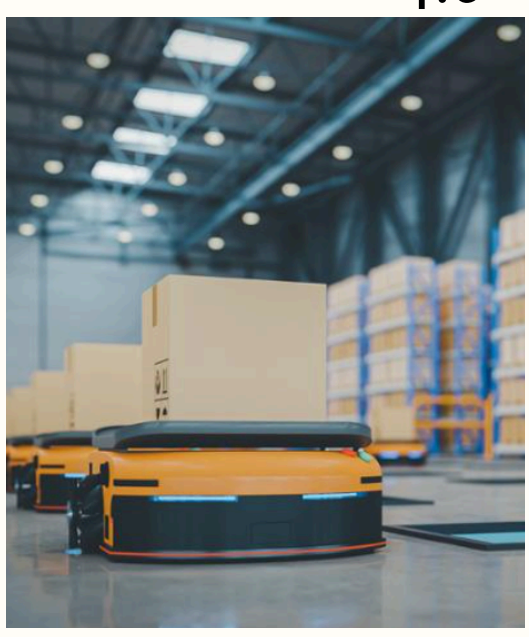

CATALOGUE 2025

Welcome to our 2025 Catalogue!

Contact Information

- **Email:** ke4tech@gmail.com
- **Mobile:** 9818873908, 7060066908
- Website www.ke4.in

For the
year 2025

INDEX

INDUSTRIAL
AUTOMATION
4.0

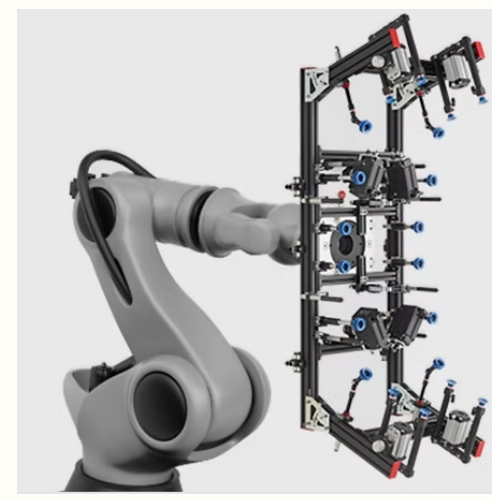

INDUSTRIAL
AUTOMATION
4.0

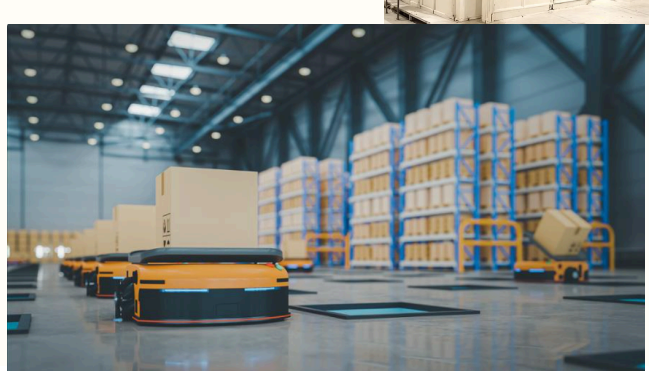

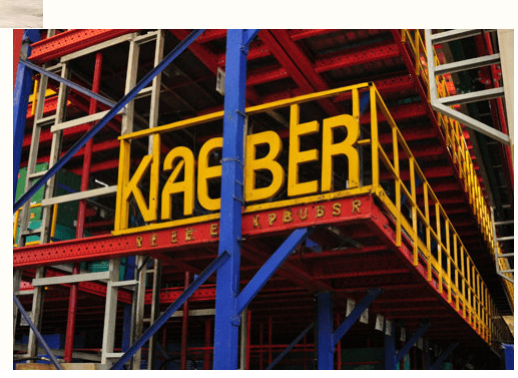

INJECTION ROBOTS

Enhance your injection molding operations with our state-of-the-art robotic automation solutions. Engineered for precision, speed, and efficiency, our injection molding robots optimize production processes by executing part removal, sprue cutting, quality inspection, and packaging with minimal human intervention.

Introducing our Topstar robot, designed for gate-picking tasks in injection molding. This cutting-edge robotic system combines advanced technology and sophisticated mechanical design to increase production efficiency and accuracy. The robot has a wrist rotation mechanism to facilitate product rotation operations and can achieve precise 90° rotation to meet various process requirements and production needs. Whether horizontal or vertical rotation is required, the robot can respond flexibly.

MDE Series AC Servo Injection Robots
The Three/Five Axis AC Servo Driven Robots are well-suited for horizontal injection molding machines ranging from 75T to 1300T. These robots are designed for efficiently handling the removal of finished products and sprues, especially in scenarios where elevated standards for appearance and precision are essential.

MBW Series AC Servo Injection Robots
The Three/Five Axis AC Servo Driven Robots are well-suited for horizontal injection molding machines ranging from 75T to 1300T. These robots are specifically designed for the removal of finished products and sprues, catering to applications with elevated demands for both appearance and precision

The AD Servo Injection Robots cater to injection molding machines within the clamping force range of 100 to 300 tons, addressing diverse production line sizes and requirements. These robots exhibit stable operational performance, making them suitable for producing small and large products. They offer options of single-stage and telescopic arms to accommodate various working scenarios. With its short operating radius and quick response time, the single-stage arm is ideal for straightforward grasping and transfer tasks. In contrast, the telescopic arm provides flexibility and adjustability for a broader working range, making it suitable for handling diverse products and complex operating environments. Leveraging advanced AC servo technology and a precision motion control system, these robots achieve high-precision motion control. Whether it's position control, speed control, or force control, the Servo Injection Robots execute these tasks accurately, ensuring stability and reliability in product grabbing and transfer. The AD Series AC Servo Injection Robots offer users reliable and efficient automated solutions featuring a wide clamping force range, single-stage and telescopic arms, high-precision motion control, robust load capacity, and versatile applications. Regardless of production efficiency or product quality, the AD series Injection Robots provide significant advantages and benefits to enterprises.

Series represents the latest advancement in fully servo-driven linear robots designed for injection molding machines. This cutting-edge series is characterized by high-speed performance, exceptional precision, and robust rigidity.

Series represents the most recent advancement in fully servo-driven linear robots designed for injection molding machines. These robots are characterized by their high speed, precision, and rigidity

Application Industries
Medical, Food, 3C, Daily Chemicals, Hardware Sorting.

Contact Information

- **Email:** ke4tech@gmail.com
- **Mobile:** 9818873908, 7060066908
- Website www.ke4.in

INDUSTRIAL ROBOTS

PRECISION, EFFICIENCY, AND AUTOMATION

Maximize productivity and efficiency with our cutting-edge industrial robots, designed to handle complex tasks with precision and speed. Whether for assembly, welding, material handling, or packaging, our robots ensure seamless automation, reducing labour costs and increasing operational efficiency.

The six-axis industrial robot has a lightweight body, an arm length of 715mm/912mm/1450mm/1813mm, and can bear a load of 7-35kg. The standard cycle time is less than 0.36 seconds, which meets the pursuit of maximum output in the shortest cycle time. The floor area is 180mmx180mm. It delivers maximum performance with a minimum footprint. Minimum working radius: 145.6 mm, reducing the footprint of the base space and ensuring a compact layout. It is mainly used in high-precision and precision production scenarios such as 3C electronics, and is used in assembly, pick and place, loading and unloading, tool operations, etc.

The independently developed four-axis SCARA robot is equipped with a precise integrated drive and control control system. Combined with a customized visual module, it can achieve rapid automatic calibration of the robot and is easy to operate. It has been optimized in appearance and function, with a smaller base size to save more space. The arm length can be selected from 300-700mm, which can meet the complex production processes and high-speed production requirements of 3C, packaging, medical and other industries.

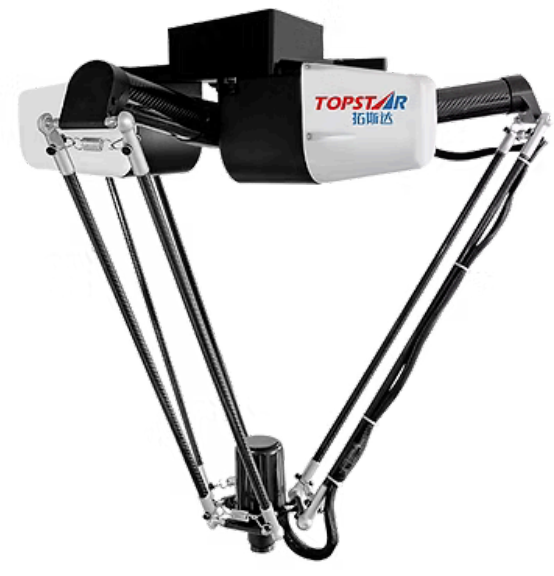

It realizes the fast following, grabbing and placing of the conveyor belt, which is widely used in food, automobile and other industries; it has the characteristics of large load, fast speed and stable structure.

Application Industries
Medical, Food, 3C, Daily Chemicals, Hardware Sorting.

Contact Information

- **Email:** ke4tech@gmail.com
- **Mobile:** 9818873908, 7060066908
- Website www.ke4.in

ALUMINUM PROFILE AND FITTINGS

Aluminum Profiles are available in various sizes, including 20x20, 30x30, 40x40, 80x80, and 40x80, among others.
Additionally, we offer T-Nuts, bolts, washers, L brackets, and fittings for joints.

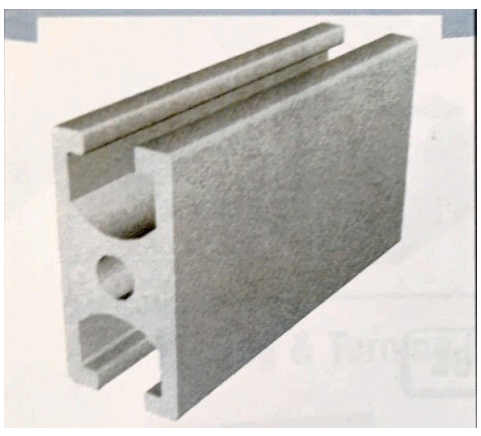

Aluminum Profile 15*30

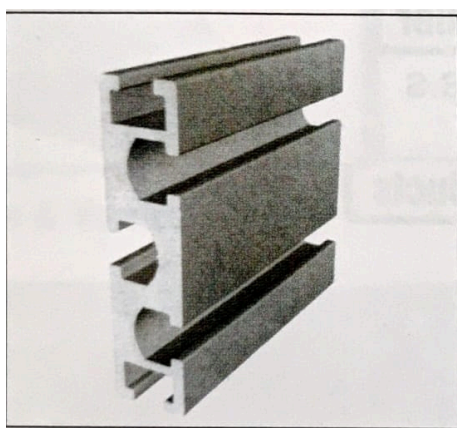

Aluminum Profile 15*60

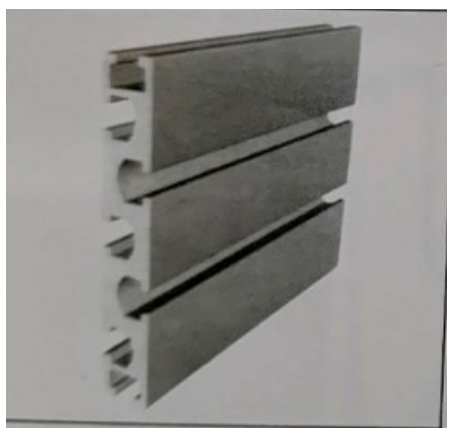

Aluminum Profile 15*90

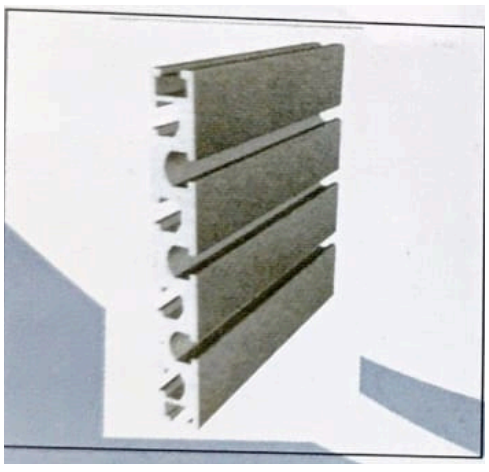

Aluminum Profile 15*120

Aluminum Profile 20*20

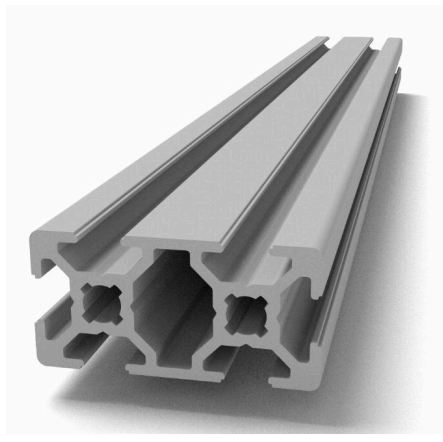

Aluminum Profile 20*40

Aluminum Profile 30*30

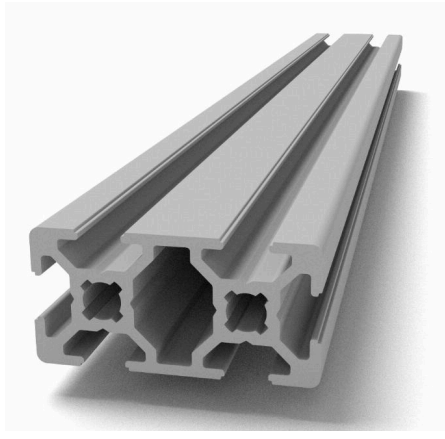

Aluminum Profile 30*60

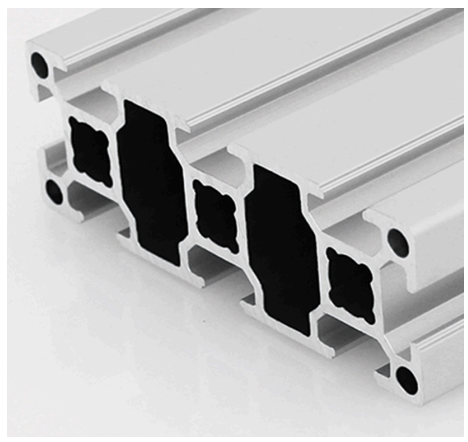

Aluminum Profile 30*90

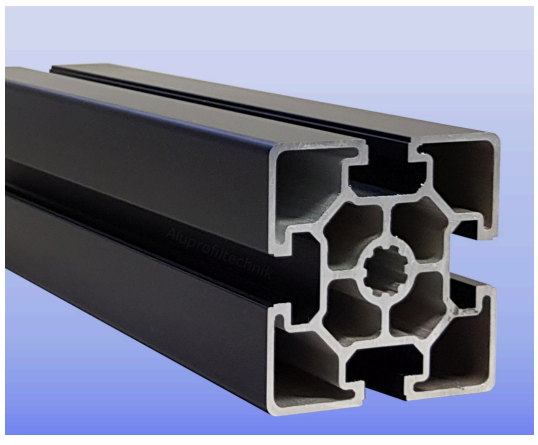

Aluminum Profile 60*60

Aluminum Profile 40*40

Aluminum Profile 40*80

ALUMINUM PROFILE AND FITTINGS

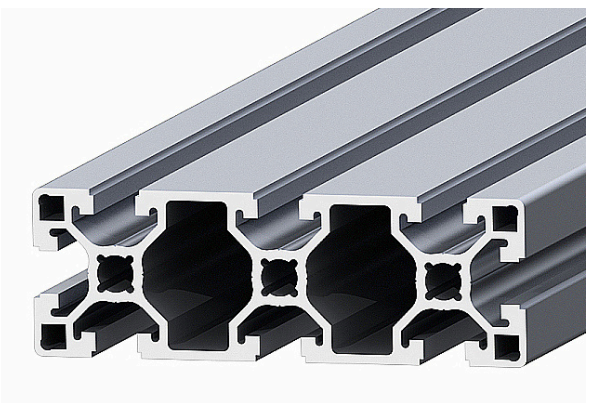

Aluminum Profile 40*120

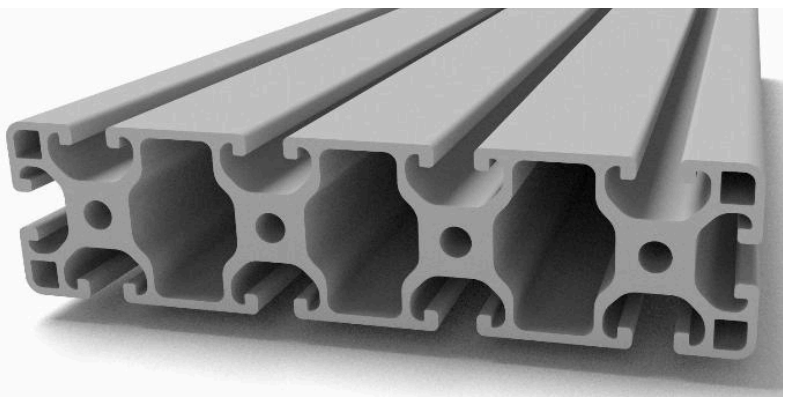

Aluminum Profile 40*160

Aluminum Profile 80*80L

Aluminum Profile 80*80H

Aluminum Profile 80*120

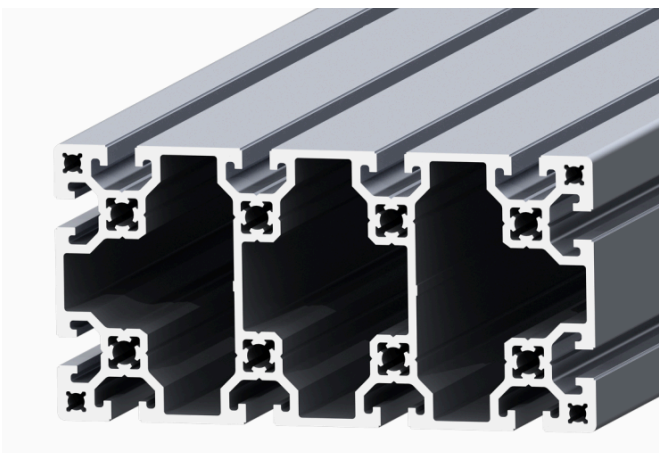

Aluminum Profile 80*160

Aluminum Profile 45*45H

Aluminum Profile 45*45L

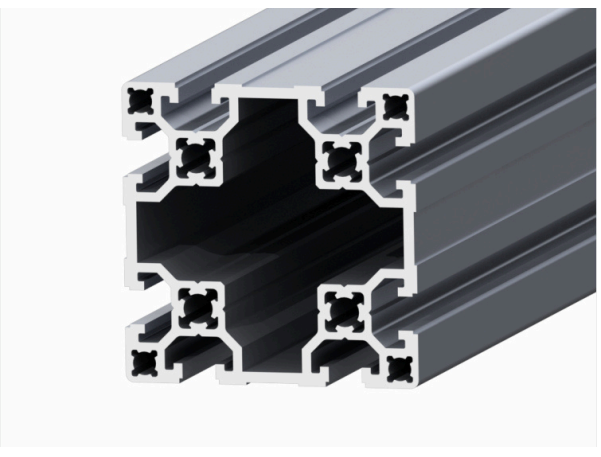

Aluminum Profile 90*90

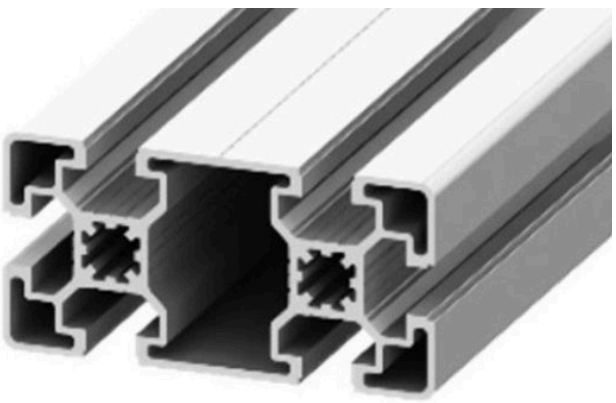

Aluminum Profile 45*90L

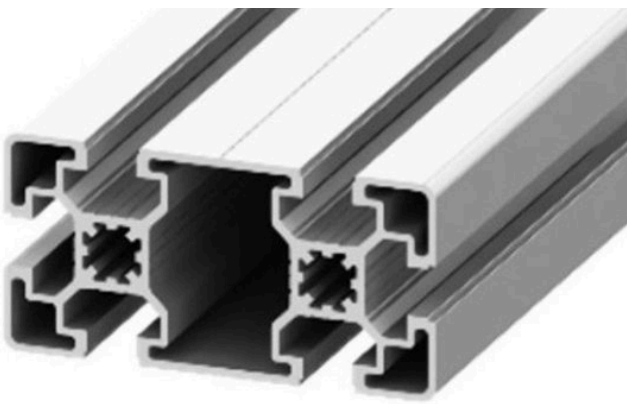

Aluminum Profile 45*90H

BRACKETS

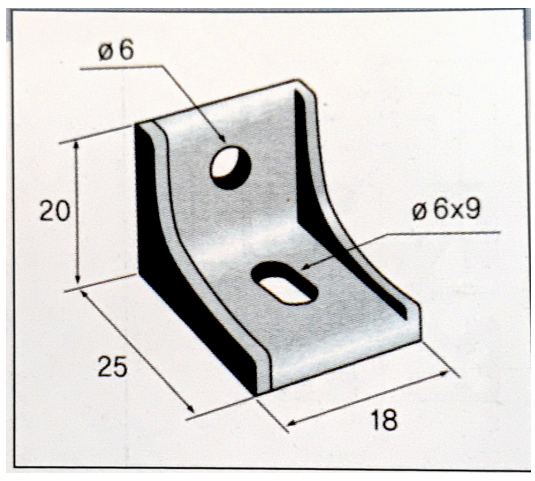

AL BRACKET 20*20

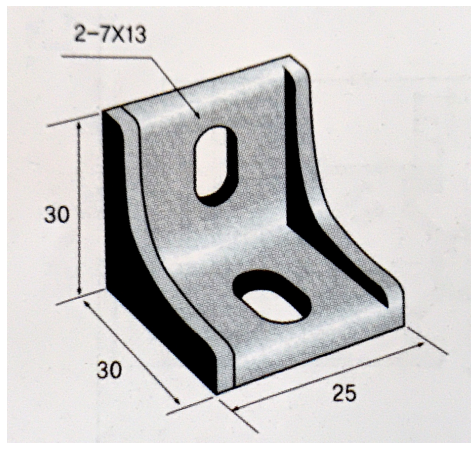

AL BRACKET 30*30

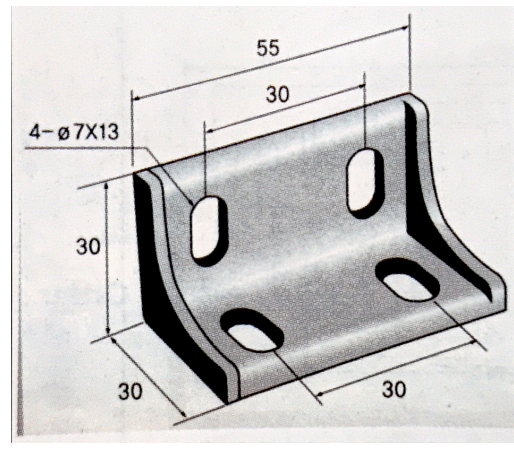

AL BRACKET 30*35

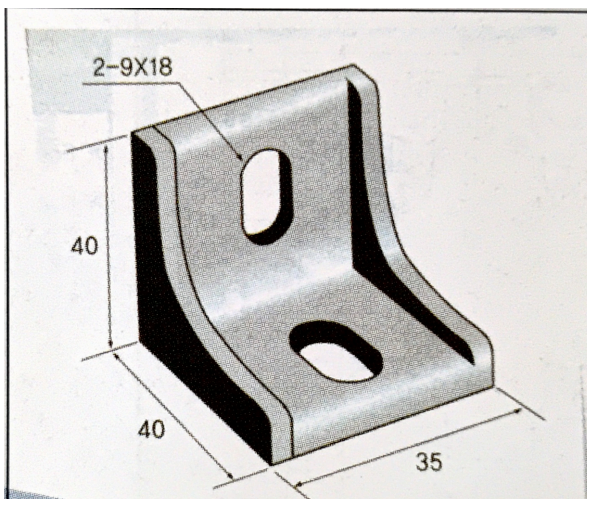

AL BRACKET 40*40

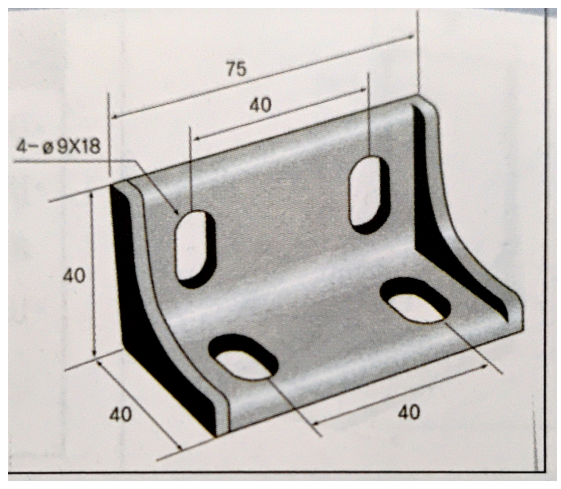

AL BRACKET 40*75

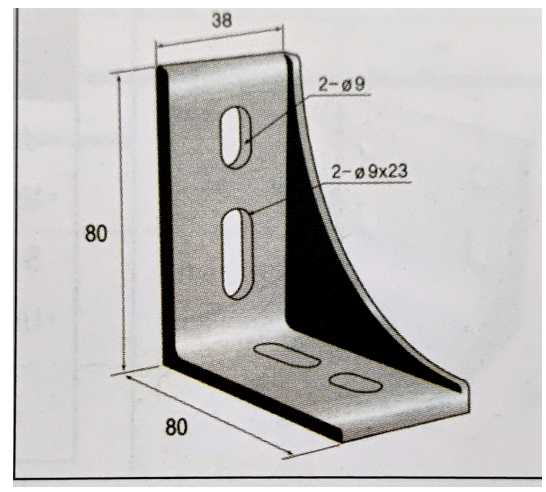

AL BRACKET 80*80

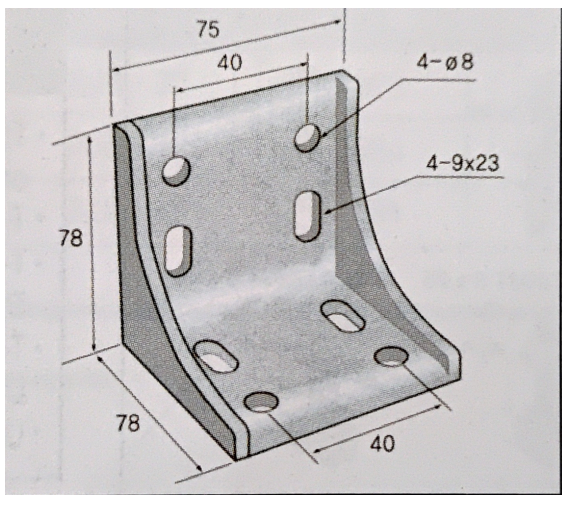

AL BRACKET 80*75

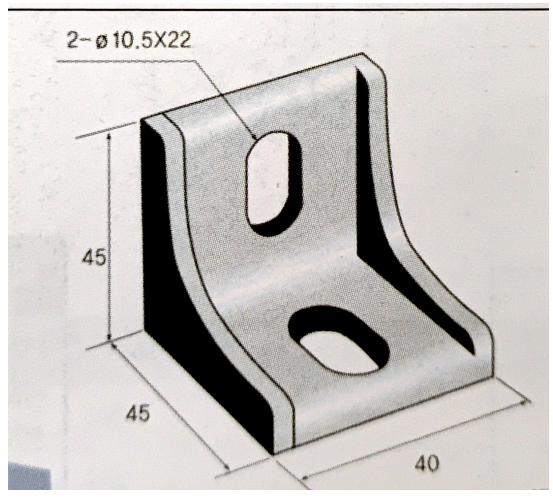

AL BRACKET 45*45

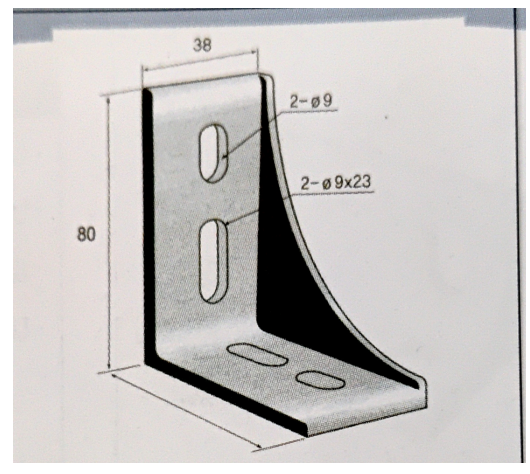

AL BRACKET 42*88

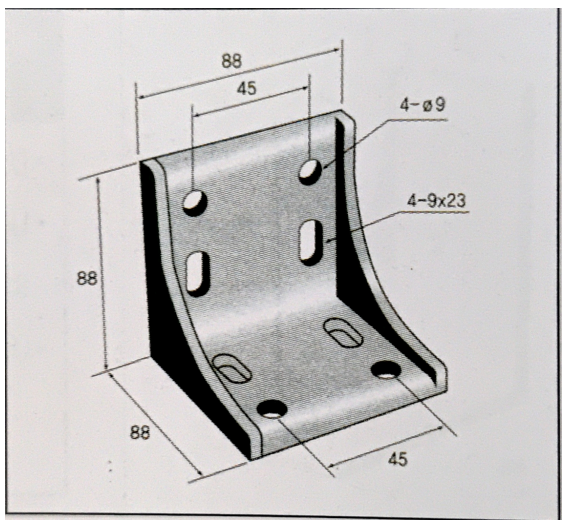

AL BRACKET 88*88

GRIPPERS

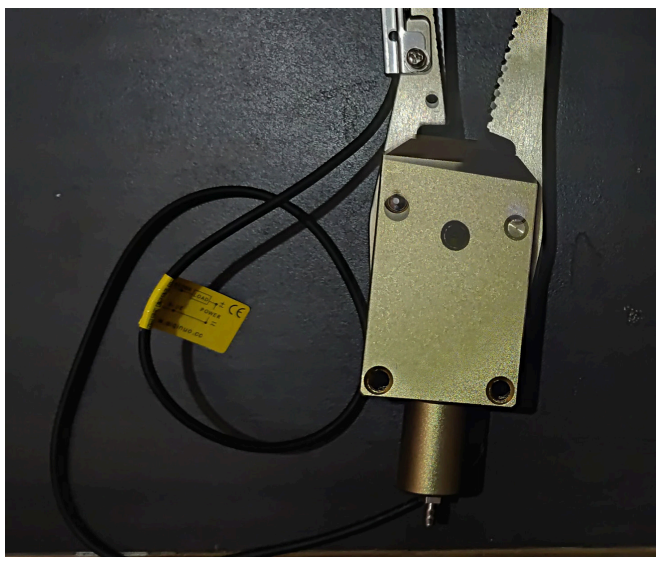

KE-12S

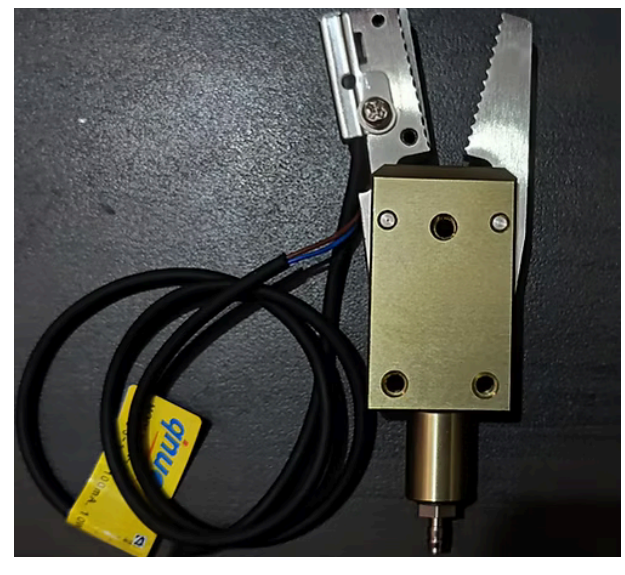

KE-20S

KE-20

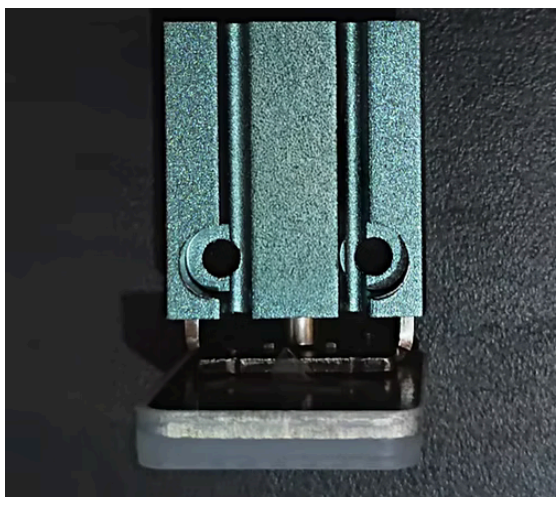

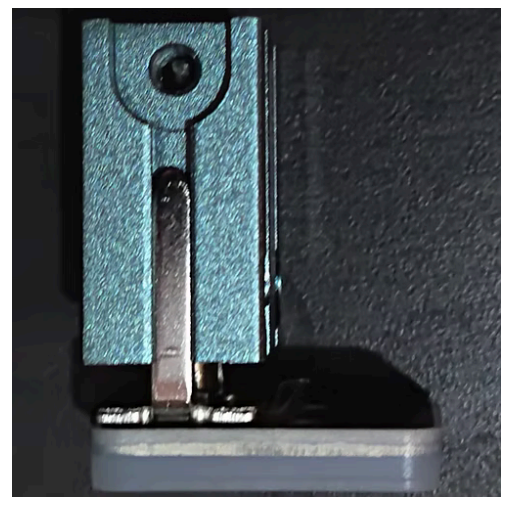

KE-1210-3035

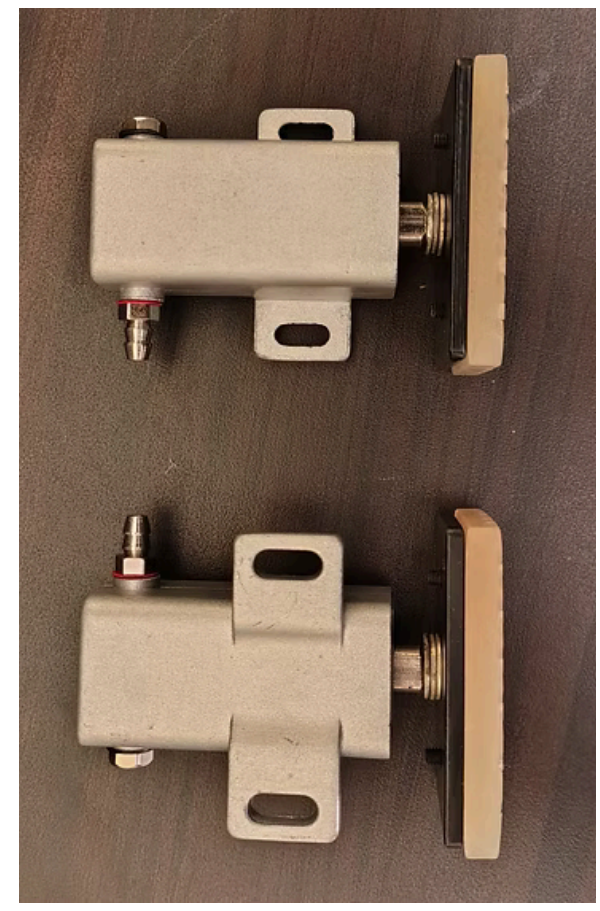

KE-1-MCD-20

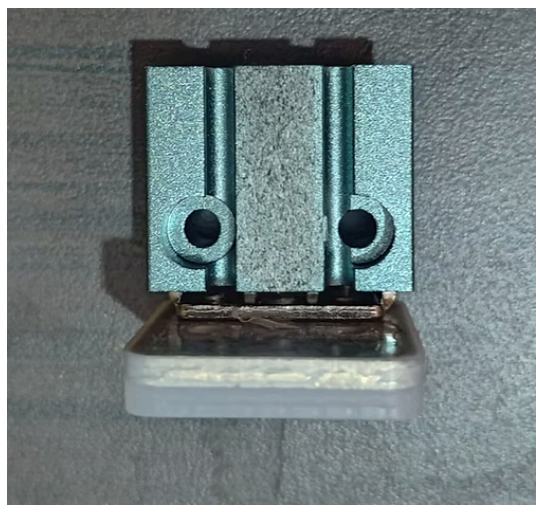

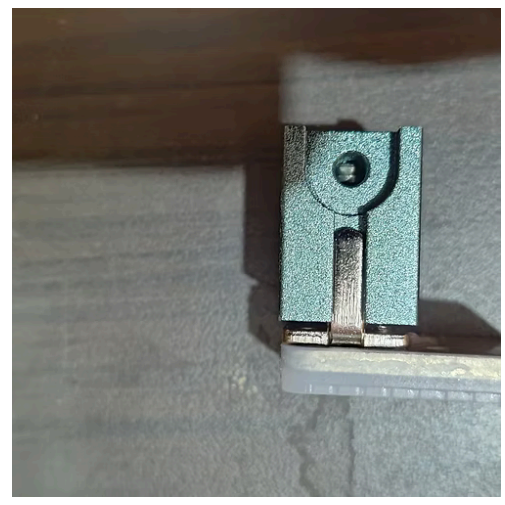

KE-1205-3035

KE-1-MCD-2

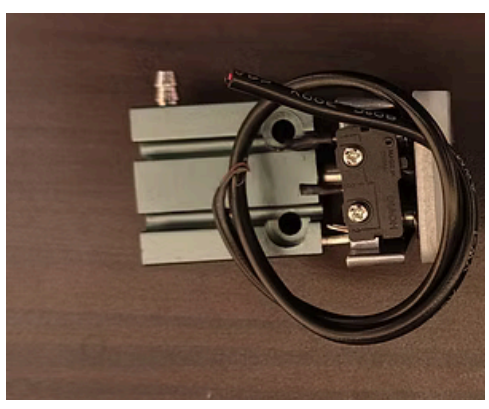

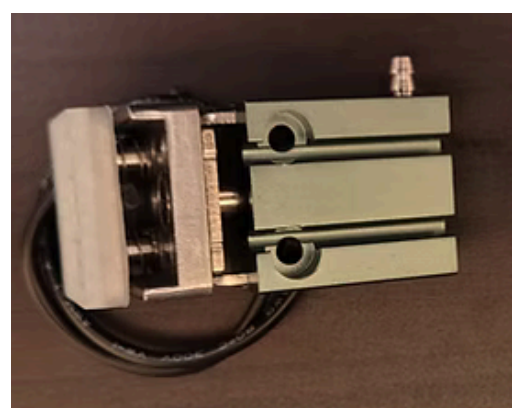

KE-2-JD-3035

KE-MIN-AG-8-BAR

GRIPPERS

KEFR20-90

KEFR10-90

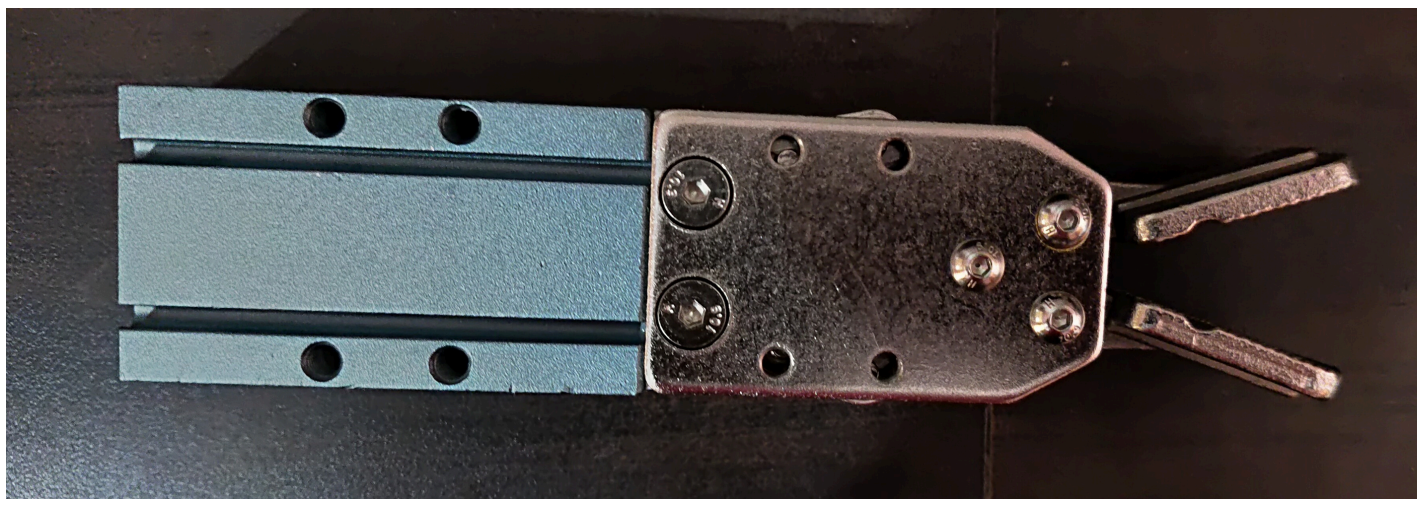

PNEUMATIC FITTINGS

Cross Union

Applicable Tube OD	ØD	L1	L2	C	A	ØdxH
4	10.5	18.5	6.5	13	15.5	3.3 x 11
6	12.5	20	7.5	15	16.5	3.3 x 13
8	15	23	9	18	18	3.3 x 15.5
10	18.5	27	11	22	20	4.3 x 19
12	21	28.5	12	24	21.5	4.3 x 21.5

Union 'Y' Reducer

Applicable Tube OD			ØD	L1	L2	L3	C	A1	A2	Ød x H
ØD1		ØD2								
4	4	6	12.5	38	7.5	25	12	14.5	15.5	Ø3.3x13
6	6	8	15	41.5	9	28	14.5	15.5	16	Ø3.3x15.5
8	8	10	18.5	46.5	11	32	18	16	18	Ø4.3x19

Union 'Y'

Applicable Tube OD	ØD	L1	L2	L3	C	A	Ød x H
4	10.5	31.5	6.5	19	10	14.5	3.3 x11
6	12.5	34.5	7.5	22	12	15.5	3.3 x13
8	15	38	9	24.5	14.5	16	3.3 x15.5
10	18.5	44	11	29.5	18	18	4.3 x19
12	21	47	12	32	20	18.5	4.3 x21.5

Union Tee

Applicable Tube OD	ØD	L1	L2	C	A	Ød x H
4	10.5	18.5	6.5	13	14.5	3.3 x11
6	12.5	20	7.5	15	15.5	3.3 x13
8	15	22	9	18	16	3.3 x15.5
10	18.5	26	11	22	20	4.3 x19
12	21	27.5	12	24	20.5	4.3 x21.5
14	23	29	13	26	21.5	4.3 x 23.5
16	25.5	31.5	14.5	29	22.5	4.3 x 26

Union Elbow Reducer

Applicable Tube OD		ØD	L1	L2	L3	A1	A2	Ød x H
ØD1	ØD2							
8	12	21	27.5	12	27	16	18.5	Ø4.3x21.5

Union Elbow

Applicable Tube OD	ØD	L1	L2	A	Ød x H
4	10.5	18.5	6.5	14.5	3.3 x11
6	12.5	20	7.5	15.5	3.3 x13
8	15	22	9	16	3.3 x15.5
10	18.5	26	11	20	4.3 x19
12	21	27.5	12	20.5	4.3 x21.5
14	23	29	13	21.5	4.3 x 23.5
16	25.5	31.5	14.5	22.5	4.3 x 26

Different Dia Straight Fitting

Applicable Tube OD		ØD	L	A1	A2
ØD1	ØD2				
4	6	12.5	32	14.5	15.5
6	8	15	34	15.5	16
6	10	18.5	41	15.5	18
8	10	18.5	37.5	16	18
8	12	21	41	16	18.5
10	12	21	40.5	18	18.5
12	16	25.5	48.5	21.5	22

Straight Union

Applicable Tube OD	ØD	L	A
4	10.5	31.5	14.5
6	12.5	33	15.5
8	15	35	16
10	18.5	39.5	19
12	21	41.5	20
14	23	42.5	20.5
16	25.5	45.5	22

Multi Distributor Union

Applicable Tube OD		ØD	L1	L2	L3	L4	C	A1	A2	ØdxH
ØD1	ØD2									
6	4	12.5	11.5	8	19	60.5	37	15.5	14.5	4.3x13
8	4	15	11.5	9	20	63	37	17	14.5	4.3x15.5
8	6	15	13.5	9	21	71	43	17	15.5	4.3x15.5
10	6	18.5	13.5	11	22	76	43	20	15.5	4.3x19
10	8	18.5	16	11	24	82	51	20	17	4.3x19
12	8	21	16	12	24	84.5	51	20.5	17	4.3x21.5
12	10	21	19.5	12	27.5	92.5	61	20.5	20	4.3x21.5

Triple Swivel

Applicable Tube OD	Thread (R)	Hex	ØD	L1	L2	L3	L4	L5	A
4	1/8	12	13.5	15	55.5	52	22	15.5	14.5
6	1/8	12	13.5	15.5	55.5	52	23	15.5	15.5
	1/4	14	18	20	69.5	64	25	19.4	15.5
8	1/8	12	13.5	17.5	55.5	52	27	15.5	17
	1/4	14	18	20.5	69.5	64	27.5	19.4	17
	3/8	19	22	23	80	74	29.5	21.6	17
	1/2	24	28	26.5	85	77.5	32.5	21.5	17
10	1/4	14	18	22.5	69.5	64	32.5	19.4	20
	3/8	19	22	24	80	74	34.5	21.6	20
	1/2	24	28	27.5	85	77.5	36.5	21.5	20
12	3/8	19	22	25	80	74	36	21.6	20.5
	1/2	24	28	28.5	85	77.5	37.5	21.5	20.5

Double Swivel

Applicable Tube OD	Thread (R)	Hex	ØD	L1	L2	L3	L4	L5	A
4	1/8	12	13.5	15	40	36.5	22	15.5	14.5
6	1/8	12	13.5	15.5	40	36.5	23	15.5	15.5
	1/4	14	18	20	50	44.5	25	19.4	15.5
8	1/8	12	13.5	17.5	40	36.5	27	15.5	17
	1/4	14	18	20.5	50	44.5	27.5	19.4	17
	3/8	19	22	23	58.5	52.5	29.5	21.6	17
	1/2	24	28	26.5	63.5	56	32.5	21.5	17
10	1/4	14	18	22.5	50	44.5	32.5	19.4	20
	3/8	19	22	24	58.5	52.5	34.5	21.6	20
	1/2	24	28	27.5	63.5	56	36.5	21.5	20
12	3/8	19	22	25	58.5	52.5	36	21.6	20.5
	1/2	24	28	28.5	63.5	56	37.5	21.5	20.5

Single Swivel (Hexagon socket)

Applicable Tube OD	Thread (R)	Hex	ØD	L1	L2	L3	L4	A
4	1/8	12	13.5	15	24.5	21	22	14.5
6	1/8	12	13.5	15.5	24.5	21	23	15.5
	1/4	14	18	20	30.5	25	25	15.5
8	1/8	12	13.5	17.5	24.5	21	27	17
	1/4	14	18	20.5	30.5	25	27.5	17
	3/8	19	22	23	36.5	30.5	29.5	17
	1/2	24	28	26.5	42	34.5	32.5	17
10	1/4	14	18	22.5	30.5	25	32.5	20
	3/8	19	22	24	36.5	30.5	34.5	20
	1/2	24	28	27.5	42	34.5	36.5	20
12	3/8	19	22	25	36.5	30.5	36	20.5
	1/2	24	28	28.5	42	34.5	37.5	20.5

Single Swivel (Slotted Head)

Applicable Tube OD	Thread	ØD	L1	L2	L3	A
4	* M5 x 0.8	10.5	12.5	20	16.5	14.5
6	* M5 x 0.8	12.5	12.5	20	16.5	15.5

Single Swivel (Internal Hexagon Socket)

Applicable Tube OD	Thread (R)	Hex	ØD	L1	L2	L3	L4	A
4	1/8	5	13.5	15	22	18.5	22	14.5
6	1/8	5	13.5	15.5	22	18.5	23	15.5
	1/4	6	18	20	28.5	23	25	15.5
8	1/8	5	13.5	17.5	22	18.5	27	17
	1/4	6	18	20.5	28.5	23	27.5	17
	3/8	8	22	23	32.5	26.5	29.5	17
	1/2	10	28	26.5	38	30.5	32.5	17
10	1/4	6	18	22.5	28.5	23	32.5	20
	3/8	8	22	24	32.5	26.5	34.5	20
	1/2	10	28	27.5	38	30.5	36.5	20
12	3/8	8	22	25	32.5	26.5	36	20.5
	1/2	10	28	28.5	38	30.5	37.5	20.5

Male Branch 'Y'

Applicable Tube OD	Thread (R)	Hex	ØD	L1	L2	L3	L4	C	A	ØdxH
4	1/8	10	10.5	42.5	6.5	19	39	10	14.5	3.3x11
	1/4	14	10.5	44.5	6.5	19	39	10	14.5	3.3x11
6	1/8	12	12.5	46	7.5	22	42.5	12	15.5	3.3x13
	1/4	14	12.5	48	7.5	22	42.5	12	15.5	3.3x13
8	1/8	14	15	49.5	9	24.5	46	14.5	16	3.3x15.5
	1/4	14	15	53	9	24.5	47.5	14.5	16	3.3x15.5
	3/8	17	15	52.5	9	24.5	46.5	14.5	16	3.3x15.5
10	1/4	17	18.5	59.5	11	29.5	54	18	18	4.3x19
	3/8	17	18.5	60	11	29.5	54	18	18	4.3x19
12	3/8	19	21	64	12	32	58	20	18.5	4.3x21.5
	1/2	22	21	66.5	12	32	59	20	18.5	4.3x21.5

Female Run Tee

Applicable Tube OD	Thread (G)	Hex	ØD	L1	L2	L3	C	A	Ød x H
6	1/8	14	12.5	20	7.5	28	15	15.5	3.3x13
	1/4	17	12.5	20	7.5	33	15	15.5	3.3x13
8	1/4	17	15	22	9	34	18	16	3.3x15.5

Male Run Tee

Applicable Tube OD	Thread (R)	Hex	ØD	L1	L2	L3	L4	C	A	Ød x H
4	1/8	10	10.5	18.5	6.5	30	26.5	13	14.5	3.3x11
	1/4	14	10.5	18.5	6.5	32	26.5	13	14.5	3.3x11
6	1/8	12	12.5	20	7.5	31.5	28	15	15.5	3.3x13
	1/4	14	12.5	20	7.5	33.5	28	15	15.5	3.3x13
8	1/8	14	15	22	9	33.5	30	18	16	3.3x15.5
	1/4	14	15	22	9	37	31.5	18	16	3.3x15.5
	3/8	17	15	22	9	36.5	30.5	18	16	3.3x15.5
10	1/4	17	18.5	26	11	41.5	36	22	20	4.3x19
	3/8	17	18.5	26	11	42	36	22	20	4.3x19
12	3/8	19	21	27.5	12	44.5	38.5	24	20.5	4.3x21.5
	1/2	22	21	27.5	12	47	39.5	24	20.5	4.3x21.5

Female Branch Tee

Applicable Tube OD	Thread (G)	Hex	ØD	L1	L2	L3	C	A	Ød x H
6	1/8	14	12.5	20	7.5	28	15	15.5	3.3x13
	1/4	17	12.5	20	7.5	33	15	15.5	3.3x13
8	1/4	17	15	22	9	34	18	16	3.3x15.5

Male Branch Tee

Applicable Tube OD	Thread (R)	Hex	ØD	L1	L2	L3	L4	C	A	ØdxH
4	1/8	10	10.5	18.5	6.5	30	26.5	13	14.5	3.3x11
	1/4	14	10.5	18.5	6.5	32	26.5	13	14.5	3.3x11
6	1/8	12	12.5	20	7.5	31.5	28	15	15.5	3.3x13
	1/4	14	12.5	20	7.5	33.5	28	15	15.5	3.3x13
8	1/8	14	15	22	9	33.5	30	18	16	3.3x15.5
	1/4	14	15	22	9	37	31.5	18	16	3.3x15.5
	3/8	17	15	22	9	36.5	30.5	18	16	3.3x15.5
10	1/4	17	18.5	26	11	41.5	36	22	20	4.3x19
	3/8	17	18.5	26	11	42	36	22	20	4.3x19
12	3/8	19	21	27.5	12	44.5	38.5	24	20.5	4.3x21.5
	1/2	22	21	27.5	12	47	39.5	24	20.5	4.3x21.5
14	1/2	22	23	29	13	50.5	43	26	21.5	4.3x23.5

Female Elbow

Applicable Tube OD	Thread (G)	Hex	ØD	L1	L2	L3	A	Ød x H
6	1/8	14	12.5	20	7.5	28	15.5	3.3x13
	1/4	17	12.5	20	7.5	33	15.5	3.3x13
8	1/4	17	15	22	9	34	16	3.3x15.5
14	1/2	27	23	29	13	45.5	21.5	4.3x23.5

Extended Male Elbow

Applicable Tube OD	Thread R	Hex	ØD	L1	L2	L3	L4	A	Ød x H
4	1/4	14	10.5	18.5	6.5	44	37.5	14.5	3.3x11
6	1/8	12	12.5	20	7.5	47	43.5	15.5	3.3x13
	1/4	14	12.5	20	7.5	47.5	42	15.5	3.3x13
8	1/4	14	15	22	9	55	49.5	16	3.3x15.5
10	1/4	17	18.5	26	11	64	58.5	20	4.3x19
	3/8	17	18.5	26	11	64.5	58.5	20	4.3x19
12	1/2	22	21	27.5	12	71	63.5	20.5	4.3x21.5

Female Run Tee

Applicable Tube OD	Thread	Hex	ØD	L1	L2	L3	L4	A	ØdxH
4	* M5 x 0.8	9	10.5	18.5	6.5	25.5	22	14.5	3.3x11
	R1/8	10	10.5	18.5	6.5	30	26.5	14.5	3.3x11
	R1/4	14	10.5	18.5	6.5	32	26.5	14.5	3.3x11
6	* M5 x 0.8	11	12.5	20	7.5	28	24.5	15.5	3.3x13
	R1/8	12	12.5	20	7.5	31.5	28	15.5	3.3x13
	R1/4	14	12.5	20	7.5	33.5	28	15.5	3.3x13
	R3/8	17	12.5	20	7.5	35	29	15.5	3.3x13
8	R1/8	14	15	22	9	33.5	30	16	3.3x15.5
	R1/4	14	15	22	9	37	31.5	16	3.3x15.5
	R3/8	17	15	22	9	36.5	30.5	16	3.3x15.5
	R1/2	22	15	22	9	42	34.5	16	3.3x15.5
10	R1/4	17	18.5	26	11	41.5	36	20	4.3x19
	R3/8	17	18.5	26	11	42	36	20	4.3x19
	R1/2	22	18.5	26	11	45.5	38	20	4.3x19
12	R1/4	19	21	27.5	12	44	38.5	20.5	4.3x21.5
	R3/8	19	21	27.5	12	44.5	38.5	20.5	4.3x21.5
	R1/2	22	21	27.5	12	47	39.5	20.5	4.3x21.5
14	1/2	22	23	29	13	50.5	43	21.5	4.3x23.5
	3/4	27	23	29	13	51.5	42.5	21.5	4.3x23.5
16	1/2	24	25.5	31.5	14.5	54	46.5	22.5	4.3x26
	3/4	27	25.5	31.5	14.5	54	45	22.5	4.3x26
	1	36	25.5	31.5	14.5	61	51	22.5	4.3x26

Male Connector (Internal Hexagon Socket)

Applicable Tube OD	Thread	Hex	ØD	L1	L2	A
4	* M5 x 0.8	2	10.5	21	17.5	14.5
	R1/8	2.5	10.5	21.5	18	14.5
	R1/4	2.5	13.5	17.5	12	14.5
6	* M5 x 0.8	2	12.5	22	18.5	15.5
	R1/8	4	12.5	23	19.5	15.5
	R1/4	4	13.5	22.5	17	15.5
	R3/8	4	17	19	13	15.5
8	R1/8	4	14.5	25.5	22	16
	R1/4	6	14.5	27	21.5	16
	R3/8	6	17	22.5	16.5	16
	R1/2	6	21.5	21.5	14	16
10	R1/8	4	18	28	24.5	18
	R1/4	6	18	29.5	24	18
	R3/8	6	18	30	24	18
	R1/2	6	21.5	23.5	16	18
12	R1/4	6	20	32	26.5	18.5
	R3/8	8	20	30.5	24.5	18.5
	R1/2	8	21.5	32.5	25	18.5

Male Connector (Internal Hexagon Socket)

Applicable Tube OD	Thread	Hex	L1	L2	A
4	* M5 x 0.8	10	32.5	29	15.5
	R1/8	10	27	23.5	15.5
	R1/4	14	27	21.5	15.5
6	* M5 x 0.8	12	35	31.5	16.5
	R1/8	12	29	25.5	16.5
	R1/4	14	29	23.5	16.5
8	R1/8	14	35	31.5	18.5
	R1/4	14	35.5	30	18.5
	R3/8	17	36	30	18.5
10	R1/4	17	38	32.5	20.5
	R3/8	17	38.5	32.5	20.5
	R1/2	22	39	31.5	20.5
12	R3/8	19	44	38	22.5
	R1/2	22	44.5	37	22.5

Female Connector

Applicable Tube OD	Thread (G)	Hex	L	A
4	1/8	14	27	14.5
	1/4	17	31	14.5
6	1/8	14	27	15.5
	1/4	17	31.5	15.5
8	1/8	14	27	16
	1/4	17	31.5	16
	3/8	22	33.5	16
10	1/4	17	33	18
	3/8	22	35	18
12	3/8	22	35	18.5
	1/2	27	39.5	18.5
14	1/2	27	39	19

Bulk Head Female Connector

Applicable Tube OD	Thread (G)	Hex H1	Hex H2	L	A	Mounting plate thickness max.	Mounting hole dia
6	1/4	17	17	32	15.5	8	14.5
8	1/4	19	17	32	16	7	16.5

Bulk Head Union

Applicable Tube OD	Thread	Hex	L1	L2	A
4	* M5 x 0.8	10	21	17.5	14.5
	R1/8	10	21.5	18	14.5
	R1/4	14	18	12.5	14.5
6	* M5 x 0.8	12	22	18.5	15.5
	R1/8	12	23	19.5	15.5
	R1/4	14	25.5	20	15.5
	R3/8	17	20	14	15.5
8	R1/8	14	25.5	22	16
	R1/4	14	27	21.5	16
	R3/8	17	22.5	16.5	16
	R1/2	22	25.5	18	16
10	R1/4	17	29.5	24	18
	R3/8	17	30	24	18
	R1/2	22	26	18.5	18
12	R1/4	22	36	30	22.5
	R3/8	22	34.5	29	22.5
	R1/2	22	32.5	25	22.5
14	1/2	24	34	26.5	19
	3/4	27	30	21	19
16	1/2	24	38	27.5	21.5
	3/4	27	32	23	21.5
	1	36	37	27	21.5

PIPES AND FITTINGS

KE-226-SS Pipe 20*0.8*1000
KE-222-Jungle Gym SUS Pipe Î¦8
KE-221-Jungle Gym SUS Pipe Î¦12

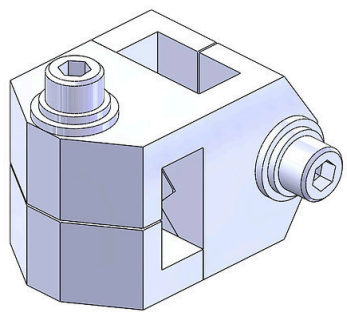

KE-101-S-Cross 10-20

KE-102-S-Cross 25-25

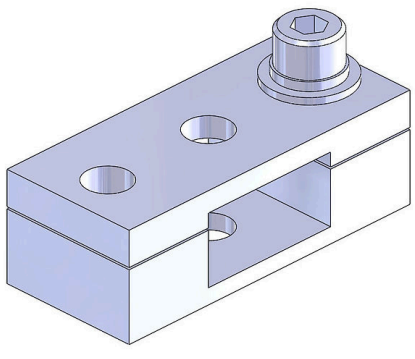

KE-103-KE-S-ATBR 10-20 M6

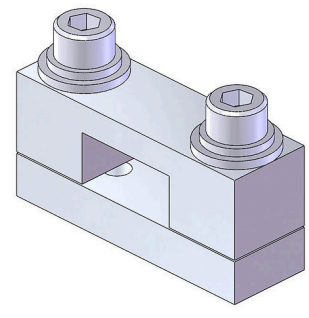

KE-104-S-SLBR 10-20

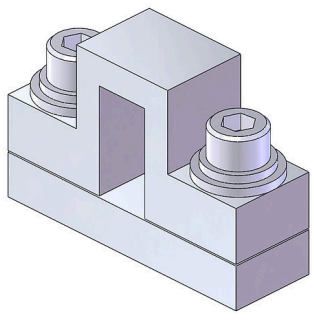

KE-105-S-SLBR 20-10

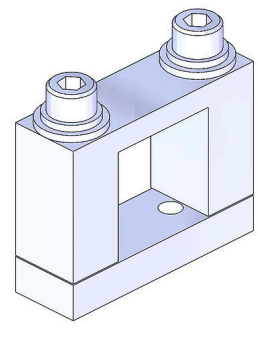

KE-106-S-SLBR 25-25

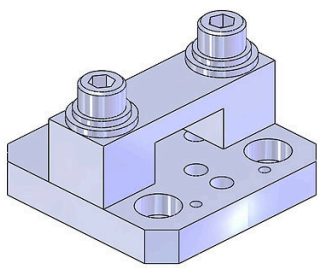

KE-107-S-BR10 MCD

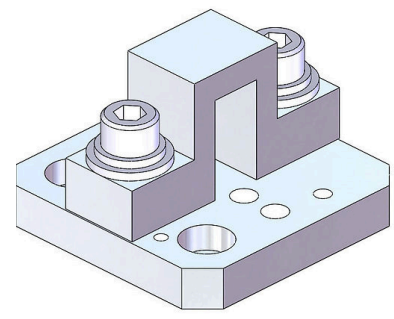

KE-108-S-BR20 MCD

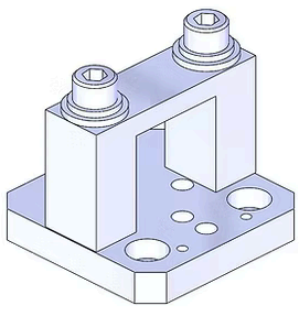

KE-109-S-BR25 MCD

KE-146-Attachment Bracket Î¦12-M8

PIPES AND FITTINGS

KE-147-Attachment Bracket Î¦20-M8

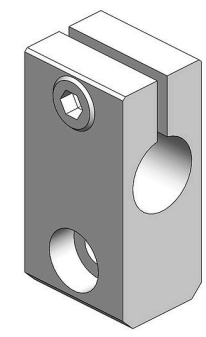

KE-148-Attachment Bracket Î¦12-M5

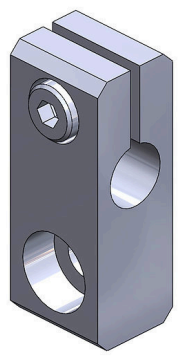

KE-149-Attachment Bracket Î¦8-M5

KE-150-Attachment Bracket Î¦12-M6

KE-151-Suction Bracket Î¦12-M5

KE-152-Suction Bracket Î¦12-PT1/8

KE-153-Attachment Bracket Î¦8-M6

KE-154-Suction Bracket Î¦8-M5

KE-155-Attachment Bracket Î¦20-M6

KE-156-Suction Bracket Î¦8-M6

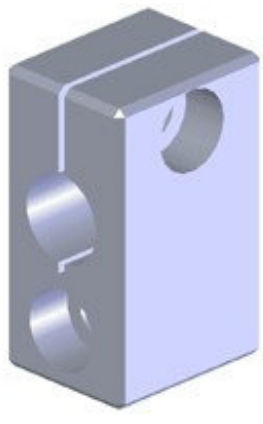

KE-157-Access Bracket Î¦12-M6

KE-158-Access Bracket Î¦20-M6

PIPES AND FITTINGS

KE-159-Suction Bracket Î¦12-M6

KE-160-Slide Bracket W Î¦12

KE-161-Slide Washer W Î¦8/Î¦12

KE-162-Slide Bracket 70 W Î¦12

KE-163-Slide Bracket 40 W Î¦8

KE-164-Slide Bracket 40 W Î¦12

KE-165-Slide Bracket 70 W Î¦8

KE-166-Slide Bracket W Î¦20

KE-167-Slide Washer W Î¦20

KE-168-Slide Bracket 40 W Î¦20

KE-169-Slide Bracket 70 W Î¦20

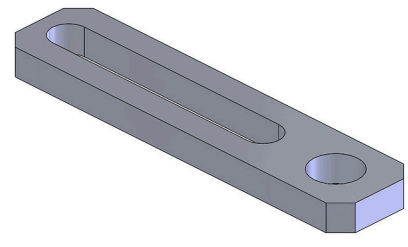

KE-170-Slide Bracket 40 W M10

PIPES AND FITTINGS

KE-171-P40mm-LS-M12TH

KE-172-P-70mm-LS-M10

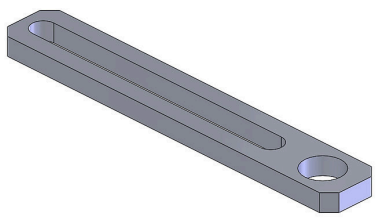

KE-173-P-70mm-LS-M12

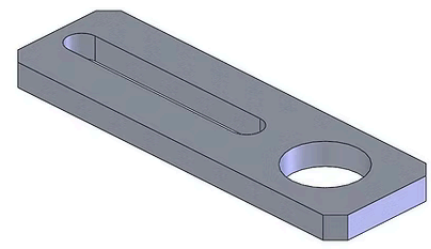

KE-174-P-40mm-LS-M17

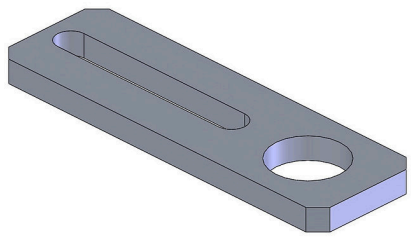

KE-175-Plate 70mm LS M17

KE-176-Slide Washer Î¦8/Î¦12

KE-177-Slide Bracket 40 M5

KE-178-Slide Bracket 70 M5

KE-179-Slide Bracket Î¦20

KE-180-Slide Washer Î¦20

KE-181-Slide Bracket Î¦8

KE-182-Slide Bracket 40 Î¦8

PIPES AND FITTINGS

KE-183-Slide Bracket 70 Î¦8

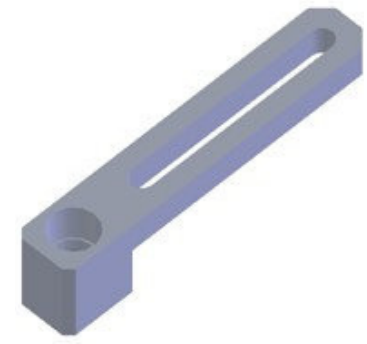

KE-184-Slide Bracket 40 PT1/8

KE-186-Slide Bracket 40 M6

KE-187-Slide Bracket 70 M6

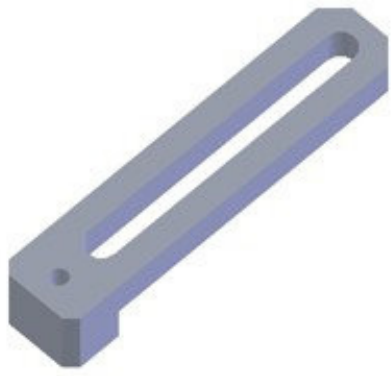

KE-188-Slide Bracket 40 M3

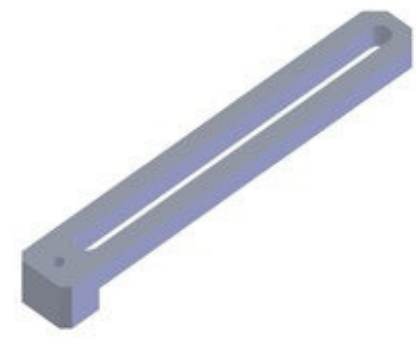

KE-189-Slide Bracket 70 M3

KE-190-Rotation Bracket Î¦12-8B

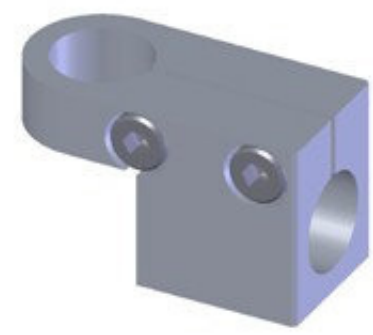

KE-191-Rotation Bracket PHI 12-12B

KE-192-Rotation Bracket PHI 8-8B

KE-193-Rotation Bracket Î¦8-M10A

KE-194-Rotation Bracket Î¦8-M5A

KE-195-Rotation Bracket Î¦8-M6A

PIPES AND FITTINGS

KE-196-Rotation Bracket Î¦8-PT1/8A

KE-197-Rotation Bracket Î¦8-M12A

KE-198-Rotation Bracket Î¦12-12A

KE-199-Rotation Bracket Î¦12-8A

KE-200-Rotation Bracket Î¦8-8A

KE-201-Rotation Bracket Î¦20-20A

KE-202-Rotation Bracket M10-8A

KE-203-Rotation Bracket M12-12A

KE-204-Rotation Bracket M17-20A

KE-205-Rotation Bracket PT1/8-8A

KE-206-Bracket T Î¦12 for MCD

KE-214-Connector for SSW

PIPES AND FITTINGS

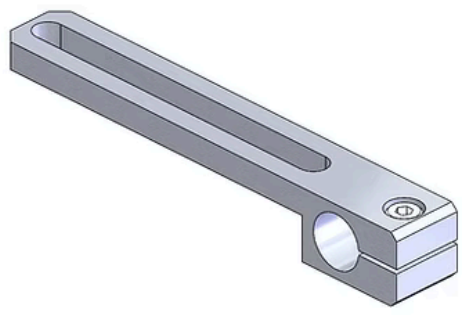

KE-215-Slide Bracket 70 T Î¦12

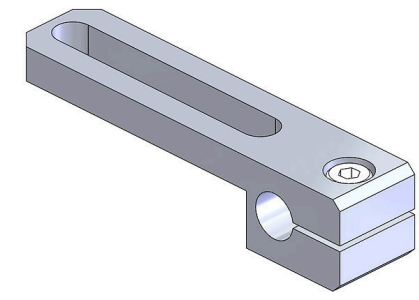

KE-216-Slide Bracket 40 T W Î¦8

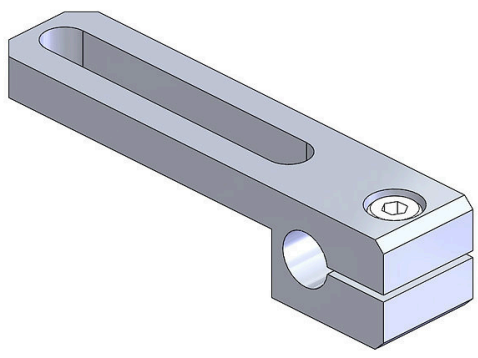

KE-217-Slide Bracket 40 T Î¦12

KE-227-Cross Connector 25

KE-266-Chuck Bracket Î¦12

KE-267-Bracket W Î¦12

KE-268-Bracket W Î¦20

KE-269-Bracket W Î¦8

KE-270-Bracket Î¦12

KE-271-Bracket Î¦20

KE-272-Bracket Î¦8

KE-276-Nipper Bracket A

PIPES AND FITTINGS

KE-277-Nipper Bracket C

KE-279-Nipper Bracket D

KE-290-Parallel Connector Î¦8-Î¦12

KE-291-Parallel Connector Î¦12-Î¦12

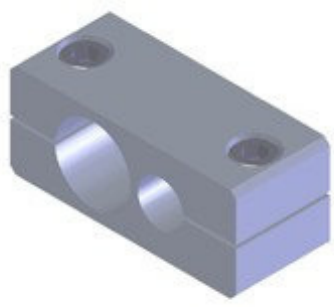

KE-292-Parallel Connector Î¦20-Î¦12

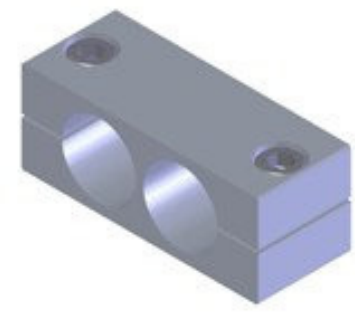

KE-293-Parallel Connector Î¦20-Î¦20

KE-294-Parallel Connector Î¦8-Î¦8

KE-295-Cross Connector Î¦12-Î¦8

KE-296-Cross Connector Î¦12-Î¦12

KE-297-Cross Connector Î¦20-Î¦12

KE-298-Cross Connector Î¦20-Î¦20

KE-299-Cross Connector Î¦8-Î¦8

PIPES AND FITTINGS

KE-300-T Connector (1) Î¦12-Î¦12

KE-301-T Connector (1) Î¦12-Î¦8

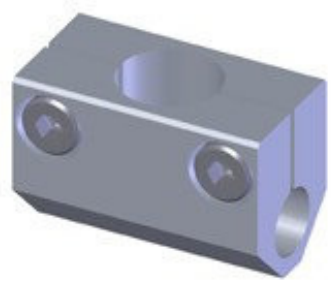

KE-302-T Connector (1) Î¦8-Î¦12

KE-303-T Connector (1) Î¦20-Î¦12

KE-304-T Connector (1) Î¦20-Î¦20

KE-305-T Connector (1) Î¦8-Î¦8

KE-306-T Connector (1) Î¦12-Î¦20

KE-307-T Connector (2) Î¦12-Î¦12

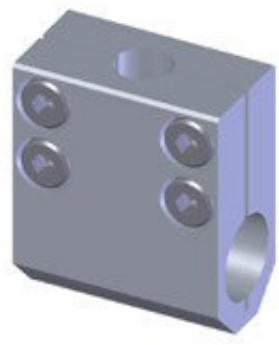

KE-308-T Connector (2) Î¦12-Î¦8

KE-309-T Connector (2) Î¦8-Î¦12

KE-310-T Connector (2) Î¦20-Î¦12

KE-311-T Connector (2) Î¦20-Î¦20

PIPES AND FITTINGS

KE-313-T Connector (2) Î¦12-Î¦20

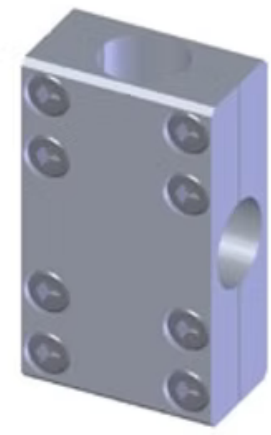

KE-314-Cross Connector (2) Î¦20-Î¦20

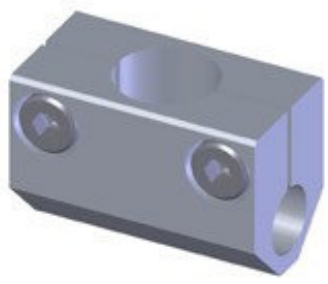

KE-302-T Connector (1) Î¦8-Î¦12

KE-303-T Connector (1) Î¦20-Î¦12

KE-304-T Connector (1) Î¦20-Î¦20

KE-305-T Connector (1) Î¦8-Î¦8

KE-306-T Connector (1) Î¦12-Î¦20

KE-307-T Connector (2) Î¦12-Î¦12

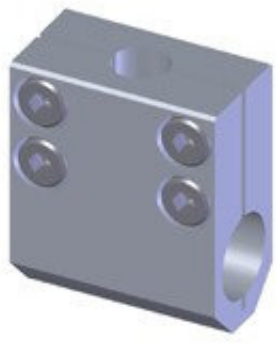

KE-308-T Connector (2) Î¦12-Î¦8

KE-309-T Connector (2) Î¦8-Î¦12

KE-310-T Connector (2) Î¦20-Î¦12

KE-311-T Connector (2) Î¦20-Î¦20

SUSPENSION ASSEMBLY

KE-SUS-NON ROTATION-180 DEGREE

KE-SUS-NON ROTATION

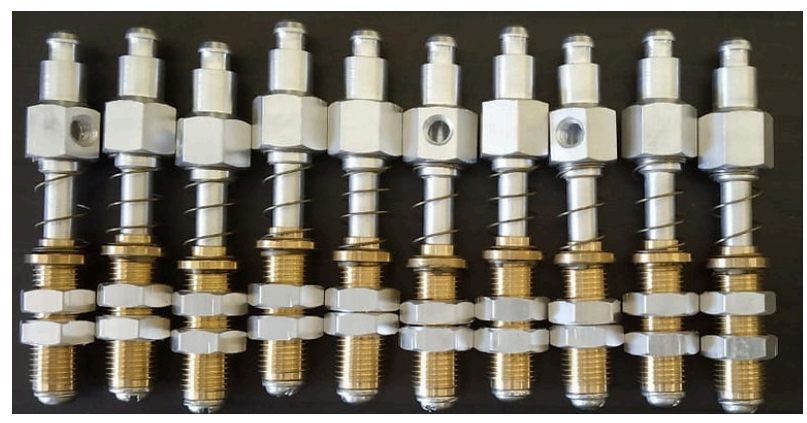

KE-SUS-ROTATION

KE-SUS-NON ROTATION

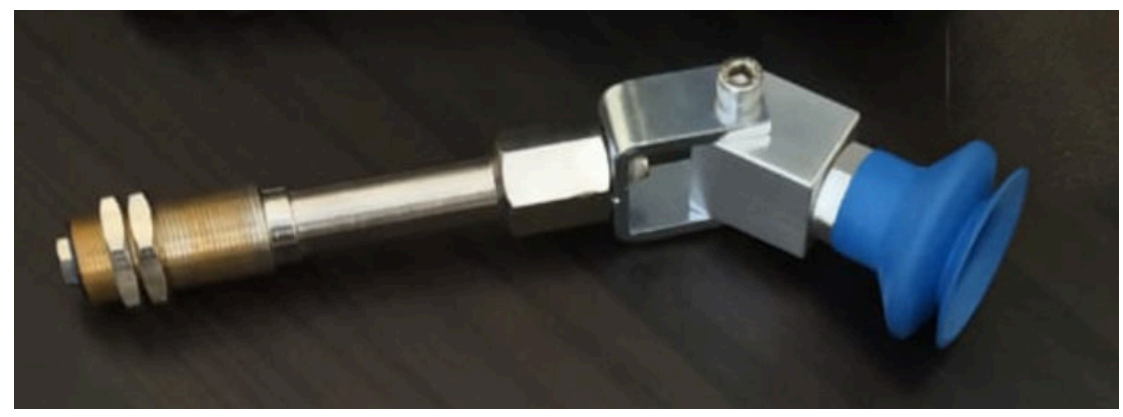

KE-SUS-NON ROTATION-180 DEGREE

KE-01-D -ST10

KE-02-D08-ST10

KE-03-D12-ST10

KE-04-D8-ST20

KE-05-D8-ST30

KE-06-D12-ST20

KE-07-D20-ST5

KE-08-D12-ST10

KE-09-D20-ST10

KE-10-D20-ST20

KE-11-D12-ST30

KE-12-D30-ST20

KE-13-D -ST20

KE-14-D -ST-7

KE-15-D16-ST20

KE-16-D19-ST5

KE-17-D19-ST-10

KE-18-D19-ST20

KE-19-D19-ST30

QC

KE-QC-01

SUCTION CUPS AND FITTINGS

KE-SUF 6 SI-55 M5-IG

KE-SUF 6 SI-55 M5-AG

KE-SUF 6 NBR-55 M5-IG

KE-SUF 6 NBR-55 M5-AG

KE-SUF 6 HT1-60 M5-IG

KE-SUF 6 HT1-60 M5-AG

KE-SUF 8 SI-55 M5-IG

KE-SUF 8 SI-55 M5-AG

SUCTION CUPS AND FITTINGS

KE-SUF 8 NBR-55 M5-IG

KE-SUF 8 NBR-55 M5-AG

KE-SUF 6 HR1-60 M5-IG

KE-SUF 6 HT1-60 M5-AG

KE-SUF 6 HT1-60 M5-IG

KE-SUF 6 HT1-60 M5-AG

KE-SUF 20 SI-55 G1/8-IG

KE-SUF 20 SI-55 G1/8-AG

SUCTION CUPS AND FITTINGS

KE-SUF 20 NBR-55 G1/8-IG

KE-SUF 20 NBR-55 G1/8-AG

KE-SUF 20 HT1-60 G1/8-IG

KE-SUF 20 HT1-60 G1/8-AG

KE-SUF 25 SI-55 G1/8-IG

KE-SUF 25 SI-55 G1/8-AG

KE-SUF 25 NBR-55 G1/8-IG

KE-SUF 25 NBR-55 G1/8-AG

SUCTION CUPS AND FITTINGS

KE-SUF 25 HT1-60 G1/8-IG

KE-SUF 25 HT1-60 G1/8-AG

KE-FSGA 11 SI-55 G1/8-IG

KE-FSGA 11 SI-55 G1/8-AG

KE-FSGA 11 NBR-55 G1/8-IG

KE-FSGA 11 NBR-55 G1/8-AG

KE-FSGA 11 HT1-60 G1/8-IG

KE-FSGA 11 HT1-60 G1/8-AG

SUCTION CUPS AND FITTINGS

KE-FSGA 14 SI-55 G1/8-IG

KE-FSGA 14 SI-55 G1/8-AG

KE-FSGA 14 NBR-55 G1/8-IG

KE-FSGA 14 NBR-55 G1/8-AG

KE-FSGA 14 NBR-55 G1/8-IG

KE-FSGA 14 NBR-55 G1/8-AG

KE-FSGA 4 SI-55 M3-AG

KE-FSGA 4 NBR-55 M3-AG

SUCTION CUPS AND FITTINGS

KE-FSGA 6 SI-55 M5-IG

KE-FSGA 6 SI-55 M5-AG

KE-FSGA 6 NBR-55 M5-IG

KE-FSGA 6 NBR-55 M5-AG

KE-FSGA 6 HT1-60 M5-IG

KE-FSGA 6 HT1-60 M5-AG

KE-FSGA 11 SI-55 M5-AG

KE-FSGA 11 SI-55 M5-AG

SUCTION CUPS AND FITTINGS

KE-FSGA 11 HT1-60 M5-AG

KE-FSGA 14 SI-55 M5-AG

KE-FSGA 14 NBR-55 M5-AG

KE-FSGA 16 NBR-55 G1/8-IG

KE-FSGA 16 NBR-55 G1/8-AG

KE-FSGA 16 NBR-55 M5-AG

KE-FSGA 16 SI-55 G1/8-IG

SUCTION CUPS AND FITTINGS

KE-FSGA 16 SI-55 G1/8-AG

KE-FSGA 16 SI-55 M5-AG

KE-FSGA 16 HT1-60 G1/8-AG

KE-FSGA 16 HT1-60 M5-AG

KE-FSGA 16 HT1-60 G1/8-IG

KE-FSGA 16 NBR-55 M5-AG

KE-FSGA 20 SI-55 G1/8-IG

KE-FSGA 20 SI-55 G1/8-AG

SUCTION CUPS AND FITTINGS

KE-FSGA 20 SI-55 M5-AG

KE-FSGA 20 HT1-60 G1/8-IG

KE-FSGA 20 HT1-60 G1/8-AG

KE-FSGA 20 HT1-60 M5-AG

KE-FSGA 20 NBR-55 G1/8-IG

KE-FSGA 20 NBR-55 G1/8-AG

KE-FSGA 22 SI-55 G1/8-IG

KE-FSGA 22 SI-55 G1/8-AG

SUCTION CUPS AND FITTINGS

KE-FSGA 22 SI-55 M5-AG

KE-FSGA 22 HT1-60 M5-AG

KE-FSGA 22 HT1-60 G1/8-IG

KE-FSGA 22 HT1-60 G1/8-AG

KE-FSGA 22 NBR-55 G1/8-IG

KE-FSGA 22 NBR-55 G1/8-AG

KE-FSGA 22 NBR-55 M5-AG

SUCTION CUPS AND FITTINGS

KE-FSGA 25 SI-55 G1/8-IG

KE-FSGA 25 SI-55 G1/8--AG

KE-FSGA 25 HT1-60 G1/8-IG

KE-FSGA 25 HT1-60 G1/8-AG

KE-FSGA 25 NBR-55 G1/8-IG

KE-FSGA 25 NBR-55 G1/8-AG

KE-FSGA 33 SI-55 G1/4-IG

KE-FSGA 33 SI-55 G1/4-AG

SUCTION CUPS AND FITTINGS

KE-FSGA 33 HT1-60 G1/4-IG

KE-FSGA 33 HT1-60 G1/4-AG

KE-FSGA 43 NBR-55 G1/4-IG

KE-FSGA 43 NBR-55 G1/4-AG

KE-FSGA 43 SI-55 G1/4-IG

KE-FSGA 43 SI-55 G1/4-AG

KE-FSGA 43 HT1-60 G1/4-IG

KE-FSGA 43 HT1-60 G1/4-AG

SUCTION CUPS AND FITTINGS

KE-FSGA 53 SI-55 G1/4-IG

KE-FSGA 53 SI-55 G1/4-AG

KE-FSGA 53 HT1-60 G1/4-IG

KE-FSGA 53 HT1-60 G1/4-AG

KE-FSGA 53 NBR-55 G1/4-IG

KE-FSGA 53 NBR-55 G1/4-AG

KE-FSGA 60 SI-55 G1/4-IG

KE-FSGA 60 SI-55 G1/4-AG

SUCTION CUPS AND FITTINGS

KE-FSGA 60 HT1-60 G1/4-IG

KE-FSGA 60 HT1-60 G1/4-AG

KE-FSGA 60 NBR-55 G1/4-IG

KE-FSGA 60 NBR-55 G1/4-AG

KE-FSG 3 SI-55 M5-AG

KE-FSG 3 NBR-55 M5-AG

KE-FSG 3 HT1-60 M5-AG

SUCTION CUPS AND FITTINGS

KE-FSG 4 SI-55 M5-IG

KE-FSG 4 SI-55 M5-AG

KE-FSG 4 NBR-55 M5-IG

KE-FSG 4 NBR-55 M5-AG

KE-FSG 4 HT1-60 M5-IG

KE-FSG 4 HT1-60 M5-AG

KE-FSG 5 SI-55 M5-IG

KE-FSG 5 SI-55 M5-AG

SUCTION CUPS AND FITTINGS

KE-FSG 5 NBR-55 M5-IG

KE-FSG 5 NBR-55 M5-AG

KE-FSG 5 HT1-60 M5-IG

KE-FSG 5 HT1-60 M5-AG

KE-FSG 7 SI-55 G1/8-IG

KE-FSG 7 SI-55 G1/8-AG

KE-FSG 7 SI-55 M5-AG

KE-FSG 7 NBR-55 G1/8-IG

SUCTION CUPS AND FITTINGS

KE-FSG 7 NBR-55 G1/8-AG

KE-FSG 7 NBR-55 M5-AG

KE-FSG 7 HT1-60 G1/8-IG

KE-FSG 7 HT1-60 G1/8-AG

KE-FSG 7 HT1-60 M5-AG

KE-FSG 9 SI-55 G1/8-IG

KE-FSG 9 SI-55 G1/8-AG

KE-FSG 9 SI-55 M5-AG

SUCTION CUPS AND FITTINGS

KE-FSG 9 NBR-55 G1/8-IG

KE-FSG 9 NBR-55 G1/8-AG

KE-FSG 9 NBR-55 M5-AG

KE-FSG 9 HT1-60 G1/8-IG

KE-FSG 9 HT1-60 G1/8-AG

KE-FSG 9 HT1-60 M5-AG

KE-FSG 12 SI-55 G1/8-IG

KE-FSG 12 SI-55 G1/8-AG

SUCTION CUPS AND FITTINGS

KE-FSG 12 SI-55 M5-AG

KE-FSG 12 NBR-55 M5-AG

KE-FSG 12 NBR-55 G1/8-IG

KE-FSG 12 NBR-55 G1/8-AG

KE-FSG 12 HT1-60 G1/8-AG

KE-FSG 12 HT1-60 G1/8-IG

KE-FSG 12 HT1-60 M5-AG

KE-FSG 14 SI-55 G1/8-IG

SUCTION CUPS AND FITTINGS

KE-FSG 14 SI-55 M5-AG

KE-FSG 14 SI-55 G1/8-AG

KE-FSG 14 NBR-55 M5-AG

KE-FSG 14 NBR-55 G1/8-IG

KE-FSG 14 NBR-55 G1/8-AG

KE-FSG 14 HT1-60 M5-AG

KE-FSG 14 HT1-60 G1/8-AG

KE-FSG 14 HT1-60 G1/8-IG

SUCTION CUPS AND FITTINGS

KE-FSG 18 SI-55 G1/8-IG

KE-FSG 18 SI-55 G1/8-AG

KE-FSG 18 SI-55 M5-AG

KE-FSG 18 NBR-55 G1/8-IG

KE-FSG 18 NBR-55 G1/8-AG

KE-FSG 18 NBR-55 M5-AG

KE-FSG 18 HT1-60 G1/8-IG

KE-FSG 18 HT1-60 G1/8-AG

SUCTION CUPS AND FITTINGS

KE-FSG 18 HT1-60 M5-AG

KE-FSG 20 SI-55 M5-AG

KE-FSG 20 SI-55 G1/8-IG

KE-FSG 20 SI-55 G1/8-AG

KE-FSG 20 NBR-55 G1/8-IG

KE-FSG 20 NBR-55 G1/8-AG

KE-FSG 20 NBR-55 M5-AG

KE-FSG 20 HT1-60 G1/8-IG

SUCTION CUPS AND FITTINGS

KE-FSG 20 HT1-60 G1/8-AG

KE-FSG 20 HT1-60 M5-AG

KE-FSG 25 SI-55 G1/8-IG

KE-FSG 25 SI-55 G1/8-AG

KE-FSG 25 NBR-55 G1/8-IG

KE-FSG 25 NBR-55 G1/8-AG

KE-FSG 25 HT1-60 G1/8-IG

KE-FSG 25 HT1-60 G1/8-AG

SUCTION CUPS AND FITTINGS

KE-FSG 32 SI-55 G1/8-IG

KE-FSG 32 SI-55 G1/8-AG

KE-FSG 32 NBR-55 G1/8-IG

KE-FSG 32 NBR-55 G1/8-AG

KE-FSG 32 HT1-60 G1/8-IG

KE-FSG 32 HT1-60 G1/8-AG

KE-FSG 42 SI-55 G1/8-IG

KE-FSG 42 SI-55 G1/8-AG

SUCTION CUPS AND FITTINGS

KE-FSG 42 NBR-55 G1/8-IG

KE-FSG 42 NBR-55 G1/8-AG

KE-FSG 42 HT1-60 G1/8-IG

KE-FSG 42 HT1-60 G1/8-AG

KE-FSG 52 SI-55 G1/4-IG

KE-FSG 52 SI-55 G1/4-AG

KE-FSG 52 NBR-55 G1/4-IG

KE-FSG 52 NBR-55 G1/4-AG

SUCTION CUPS AND FITTINGS

KE-FSG 52 HT1-60 G1/4-IG

KE-FSG 52 HT1-60 G1/4-AG

KE-FSG 62 SI-55 G1/4-IG

KE-FSG 62 SI-55 G1/4-AG

KE-FSG 62 NBR-55 G1/4-IG

KE-FSG 62 NBR-55 G1/4-AG

KE-FSG 62 HT1-60 G1/4-IG

KE-FSG 62 HT1-60 G1/4-AG

AUXILARY

- The auxiliary equipment enhances the efficiency and performance of the molding machine by providing consistent material feeding, temperature control, and automated handling processes.
- Integrated auxiliary systems ensure optimal mold cooling, precise material dosing, and effective drying, resulting in improved product quality and reduced cycle times.
- Auxiliaries such as hopper dryers, mold temperature controllers, and conveyors support seamless operation, reducing downtime and enhancing production efficiency.
- With advanced auxiliary equipment, the molding machine achieves stable processing conditions, minimizing defects and maximizing throughput.
- The auxiliary setup complements the core molding machine functions by maintaining material integrity, ensuring energy efficiency, and facilitating smooth workflow automation.

Granulating and Recycling System
Mainly used for crushing nozzle materials at the machine side. It is suitable for recycling all kinds of hard and brittle plastic nozzles. It is especially suitable for crushing and recycling hard nozzle materials such as PC, nylon, and ABS. It adopts a screen-less design, and the crushed particles are even and the dust content is low. Very rarely, the feed hopper adopts a double-layer sound insulation design, the inner layer is made of stainless steel, and has a visual material window.

Dosing and Mixing System
It is suitable for accurately weighing and mixing 2 to 6 raw materials such as new materials, recycled materials, masterbatch, and various additives. According to the preset proportion mixing, the required rotation speed (rpm) is automatically calculated through the conditions set by the microcomputer control system, and the measurement is accurate with an error value of ±1%.l.

Mold Temperature Controller
As an essential auxiliary equipment, Topstar's new fourth-generation mold temperature controller has standard functions such as fast heating, stable temperature, and low water leakage. It can meet the needs of industry customers for intelligent and digital upgrades, solve the temperature control problem of injection molding production, and has a temperature control accuracy of ±0.1℃, which improves the temperature control efficiency by 10% and increases the service life by 40%.

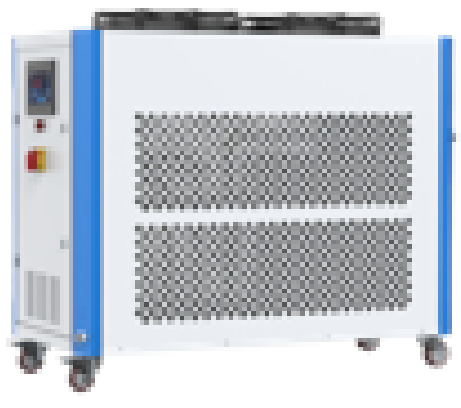

Auto Cooling System
Air Chillers adopt fin condensers (without the need of cooling water) with the features of rapid heat transmission and excellent heat dispersion. This series can be afforded cooling ranges from 5~35℃ (temperature-controlled accuracy at ±2℃); the compressors' power ranges from 5HP~50HP and cooling.

AUXILARY

Feeding and Conveying System

Stainless steel (corrosion free) single hopper loader is designed to provide rapid transportation of free-flowing for virgin resin or regrind resin directly to the injection molding machine. The design of the hinged upper cover of the vacuum motor ensures quick cleanup time and easy maintenance.

WELCOME TO KE RACK SYSTEM

We are Renowned Manufacturers, Supplier, Trader, and Exporter of a wide range of RackingSystems & Storage Systems. Our range encompasses Display Racks, Heavy Duty Racks, PalletRacks, Slotted Angel Racks, Shopping Trolley, Commercial Racks, Shoes Racks, Fruit & VegetableRacks, Cosmetic Racks, Shopping Trolley, and Wine/ Liquor Racks.

Mold racks are specialized storage systems designed to store heavy and bulky molds, dies, and tools in an organized and efficient manner. They are commonly used in industries such as:
Manufacturing & Injection Molding – To store injection molds, stamping dies, and heavy tools.
Automotive & Aerospace – For keeping large metal molds and die-casting components.
Metalworking & Tooling – Organizing heavy-duty metal dies and machining tools.
Warehouses & Logistics – Systematic storage of large and valuable molds.

The Mezzanine Floor - KE-SiG is designed for industrial and commercial applications, offering a versatile solution for optimizing vertical space. Below are some key uses:
. Increased Storage Capacity
Improved Operational Efficiency
Administrative Spaces
Flexibility for Dynamic Operations
Enhanced Safety and Organization
Cost-Effective Space Maximization

We help our customer to improve and expand their production capacity and efficiency of doing the work by offering the extra space in their working areas. Our Mezzanine Floor are also suitable for linking of cranes to the storage shelfs in order to increase much more feasibility to flow the goods for storing and picking while the customer demands it.We are manufacturing these Modular Mezzanine Floors with the cost effective advanced technology.

Ke Rackis the recognized brand of Modular Mezzanine Floor Manufacturers. We are the leading manufacturers of Modular Mezzanine floor which is been made by using the best quality of raw material sourced from best vendors. These floors are used in the advanced architectures of homes, warehouses, workplace, etc. This Modular Mezzanine floor is an ideal solutionto increase the space in workplaces especially in the areas where space is often a restricted attribute.

WELCOME TO KE RACK SYSTEM

A Rack Supported Mezzanine is a type of storage solution commonly used in warehouses and industrial facilities to maximize vertical space efficiently. It utilizes the existing racking system to support an elevated floor, creating additional storage or workspace above the racks without the need for major structural modifications to the building.

Long Span Racks Manufacturers

We manufacture them with a bolt free lock which improves the safety for operatives who are accessing the installation.
We manufacture these racks in long span which helps to store the large height material easily.These racks are manufactured with the technological advancements

Pallet racks consist of galvanized stands with no welded parts. Assembly is done with screws. As a result of these screw connections, assembly is very simple, and in case of damage to a stand due to uncareful handling of loads, the damaged component can be replaced easily. Load bearing capacity of stand's is up to 22000kg, depending on the disposition of the longitudinal beams.Assembling the longitudinal beams is very simple and fast. The beams are secured with a special pin in order to prevent the beam from being dislodged during usage.Heights can be adjusted very easily and quickly (step heights of 75 or 50 mm). Beams can be plastified in blue or some other colour, all in accordance with the investor's wishes and preferences .

Ke Rack is the renowned brand for manufacturing Slotted Angle Rack We are using the best quality of raw material sourced from the high-class vendors of the market. We manufacture and supply the finest range of Slotted Angle rack with wire mash provided by us in the finest and highest quality of steel. We aim at designing the best angle racks which can improve the decor of the houses and offices and can also fulfil